Issued date : NOV.13.2025

SAMSUNG ELECTRO-MECHANICS

RoHS+Halogen Compliant ecoparts

SPECIFICATION *(Reference Sheet)*

· **Supplier : Samsung electro-mechanics**
· **Product : Multi-layer Ceramic Capacitor**

· **Samsung P/N :** **CL21A226MOQNNNE**
· **Description :** **CAP, 22μF, 16V, ±20%, X5R, 0805**

General | Standard | Lineup Normal | 85℃ | 2T | Features Normal | Reflow Flow OK

A. Samsung Part Number

CL	21	A	226	M	O	Q	N	N	N	E
①	②	③	④	⑤	⑥	⑦	⑧	⑨	⑩	⑪

①	**Series**	Samsung Multi-layer Ceramic Capacitor			
②	**Size**	0805 (inch code)	L : 2.00±0.15㎜	W :	1.25±0.15㎜
③	**Dielectric**	X5R	⑧	**Inner electrode**	Ni
④	**Capacitance**	22μF		**Termination**	Cu
⑤	**Capacitance tolerance**	±20%		**Plating**	Ni/Sn 100% (Pb Free)
			⑨	**Product**	Normal
⑥	**Rated Voltage**	16V	⑩	**Special**	Reserved for future use
⑦	**Thickness**	1.25±0.15㎜	⑪	**Packaging**	Embossed Type, 7" Reel / Quantity : 2K

B. Structure & Dimension

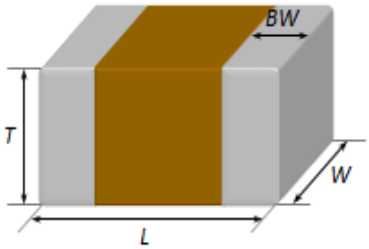

Samsung P/N	Dimension(㎜)			
	L	W	T	BW
CL21A226MOQNNNE	2.00±0.15	1.25±0.15	1.25±0.15	0.50+0.20/-0.30

C. Samsung Reliablility Test and Judgement Condition

	Judgement	Test condition
Capacitance	Within specified tolerance	120㎐±20% / 0.5±0.1Vrms *A capacitor prior to measuring the capacitance is heat treated at 150℃+0/-10℃ for 1hour and maintained in ambient air for 24±2 hours.
Tan δ (DF)	0.1 max.	
Insulation Resistance	10,000㏁ or 100㏁·㎌ Whichever is smaller	Rated Voltage 60~120 sec
Appearance	No abnormal exterior appearance	Microscope (×10)
Withstanding Voltage	No dielectric breakdown or mechanical breakdown	250% of the rated voltage
Temperature Characteristics	X5R (From -55℃ to 85℃, Capacitance change should be within ±15%)	
Adhesive Strength of Termination	No peeling shall be occur on the terminal electrode	10N, for 10±1 sec.
Bending Strength	Capacitance change : within ±10%	Bending to the limit (1mm) with 1.0mm/sec.
Solderability	More than 95% of terminal surface is to be soldered newly	SnAg3.0Cu0.5 solder 245±5℃, 3±0.3sec. (preheating : 80~120℃ for 10~30sec.)
Resistance to Soldering Heat	Capacitance change : within -7.5 ~ +10% Tan δ, IR : initial spec.	Solder pot : 270±5℃, 10±1sec. * PCB Mounted Test
Vibration Test	Capacitance change : within ±5% Tan δ, IR : initial spec.	Amplitude : 1.5mm From 10㎐ to 55㎐ (return : 1min.) 2hours × 3 direction (x, y, z)
Moisture Resistance	Capacitance change : within ±12.5% Tan δ : 0.2 max. IR : 500㏁ or 12.5㏁·㎌ Whichever is smaller	With rated voltage 40±2℃,90~95%RH, 500hrs+12/-0hrs
High Temperature Resistance	Capacitance change : within ±12.5% Tan δ : 0.2 max. IR : 1,000㏁ or 25㏁·㎌ Whichever is smaller	With 150% of the rated voltage Max. operating temperature 1,000+48/-0hrs
Temperature Cycling	Capacitance change : within ±7.5% Tan δ, IR : initial spec.	1 cycle condition Min. operating temperature → 25℃ → Max. operating temperature → 25℃ 5 cycle test

※ The reliability test condition can be replaced by the corresponding accelerated test condition.

D. Recommended Soldering method :

Reflow Profile meet IPC/JEDEC J-STD-020 F Standard

※ Please be advised that they are standard product specifications for reference only.
We may change, modify or discontinue the product specifications without notice at any time.
So, you need to approve the product specifications before placing an order.
Should you have any question regarding the product specifications,
please contact our sales personnel or application engineers.

E. Recommended TEST PCB

Adhesive strength of termination

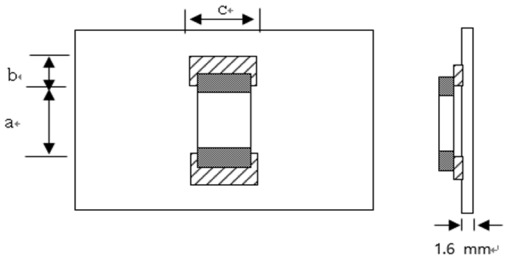

☞ Material : Glass epoxy substrate
☞ Thickness : T=1.6 ㎜
☞ ▨ : Copper foil (T=0.035 ㎜)
☞ Solder paste : SAC305

Size code	Size (mm)	a	b	c
R1	0.25 × 0.125	0.11	0.1	0.13
R5	0.50 × 0.25	0.2	0.64	0.25
02	0.4 × 0.2	0.2	0.17	0.26
03	0.6 × 0.3	0.3	0.3	0.3
05	1.0. × 0.5	0.4	0.55	0.5
10	1.6 × 0.8	1.0	1.0	1.2
10(ANSC)	1.6 × 0.8	0.6~0.8	0.6~0.8	0.6~0.8
21	2.0 × 1.25	1.2	1.4	1.65
31	3.2 × 1.6	2.2	1.4	2.0
32	3.2 × 2.5	2.2	1.4	2.9
42	4.5 ×2.0	3.3	6.0	1.5
43	4.5 × 3.2	3.5	1.75	3.7
55	5.7 × 5.0	4.5	1.75	5.6

Substrate for bending strength test

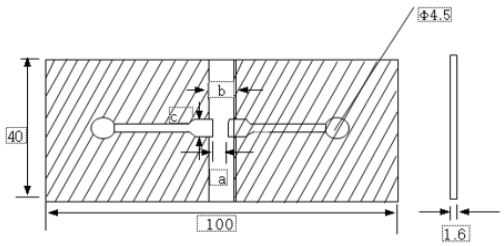

☞ Material : Glass epoxy substrate
☞ Thickness : T=1.6 ㎜ (T= 0.8 ㎜ for 02/03/05)
☞ ▭ : Copper foil (T=0.035 ㎜) ☞ ▨ : Solder resist
☞ Solder paste : SAC305

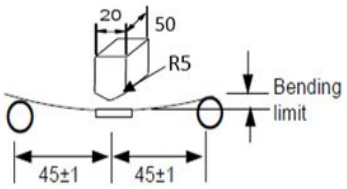

Size code	Size (mm)	a	b	c
R1	0.25 × 0.125	0.1	0.35	0.14
R5	0.50 × 0.25	0.2	0.64	0.25
02	0.4 × 0.2	0.2	0.6	0.2
03	0.6 × 0.3	0.3	0.9	0.3
05	1.0 × 0.5	0.4	1.5	0.5
10	1.6 × 0.8	1.0	3.0	1.2
10(ANSC)	1.6 × 0.8	0.6~0.8	1.8~2.4	0.6~0.8
21	2.0 × 1.25	1.2	4.0	1.65
31	3.2 × 1.6	2.2	5.0	2.0
32	3.2 × 2.5	2.2	5.0	2.9
42	4.5 ×2.0	3.5	5.0	1.6~2.0
43	4.5 × 3.2	3.5	7.0	3.7
55	5.7 × 5.0	4.5	8.0	5.6

Substrate for Reliability test

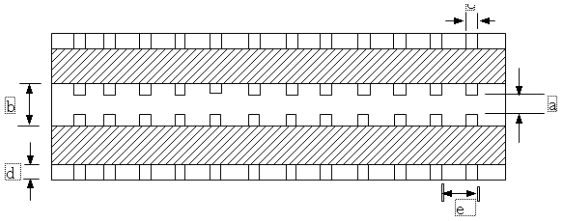

☞ Material : Glass epoxy substrate

☞ : Copper foil (T=0.035 ㎜) ☞ : Solder resist

☞ Solder paste : SAC305

Size code	Size (mm)	a	b	c	d	e
R1	0.25 × 0.125	0.1	0.35	0.14	5.0	5.5
R5	0.50 × 0.25	0.2	0.64	0.25	5.0	5.0
02	0.4 × 0.2	0.2	0.6	0.2	5.0	5.5
03	0.6 × 0.3	0.3	0.9	0.3	5.0	5.5
05	1.0 × 0.5	0.4	1.5	0.5	5.0	5.5
10	1.6 × 0.8	1.0	3.0	1.2	5.0	5.5
10(ANSC)	1.6 × 0.8	0.6~0.8	1.8~2.4	0.6~0.8	5.0	5.5
21	2.0 × 1.25	1.2	4.0	1.65	5.0	5.5
31	3.2 × 1.6	2.2	5.0	2.0	5.0	5.5
32	3.2 × 2.5	2.2	5.0	2.9	5.0	5.5
42	4.5 ×2.0	3.3	6.0	1.5	7.5	6.0
43	4.5 × 3.2	3.5	7.0	3.7	5.0	5.5
55	5.7 × 5.0	4.5	8.0	5.6	5.0	5.5

1. Packaging

This specification applies to taping of MLCC

When customers require, the specification may be changed under the agreement.

1-1. Figure

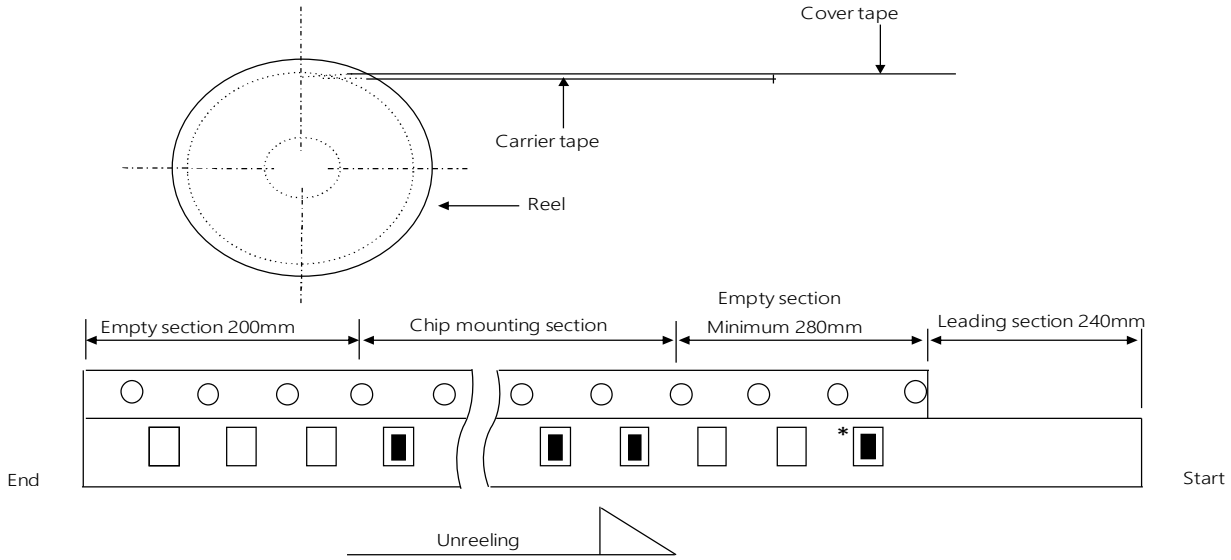

* The chip is only use for identifying the label and packaged products. Please don't use the chip.

1-2. Quantity

[unit:pcs]

Type	Size Code mm(Inch)	Chip Thickness	Taping Type	Pitch	Plastic 7 inches reel	Plastic 10 inches reel	Plastic 13 inches reel
MLCC	0201 (008004)	0.125 mm	EMBOSSED	1mm	20K/50K		
	0402 (01005)	0.2 mm	PAPER	2mm	20k	-	100K
	0603 (0201)	0.3 mm	PAPER	2mm	10K	-	50K
	1005 (0402)	0.5 mm	PAPER	2mm	10K	-	50K
	1608 (0603)	0.8 mm	PAPER	4mm	4K	10K	15K / 10K
		1.0 mm	EMBOSSED	4mm	3K		10K
	2012 (0805)	T≤0.85 mm	PAPER	4mm	4K	10K	15K / 10K
		T≥1.0 mm	EMBOSSED	4mm	2K	6K	10K
	3216 (1206)	T≤0.85 mm	PAPER	4mm	4K	10K	10K
		T≥1.0 mm	EMBOSSED	4mm	2K	4K	10K
	3225 (1210)	T≤1.6 mm	EMBOSSED	4mm	2K	4K	10K
		T≥2.0 mm	EMBOSSED	4mm	1K	4K	4K
	4520 (1808)	T≤1.6 mm	EMBOSSED	8mm	2k	-	8k
		T≥2.0 mm	EMBOSSED	8mm	1k	-	4k
	4532 (1812)	T≤2.0 mm	EMBOSSED	8mm	-	-	4K
		T>2.0 mm	EMBOSSED	8mm	-	-	2K
	5750 (2220)	T≥2.5 mm	EMBOSSED	8mm	-	-	2K

1-3. Tape Size

1-3-1. Cardboard(Paper) tape : 4mm pitch

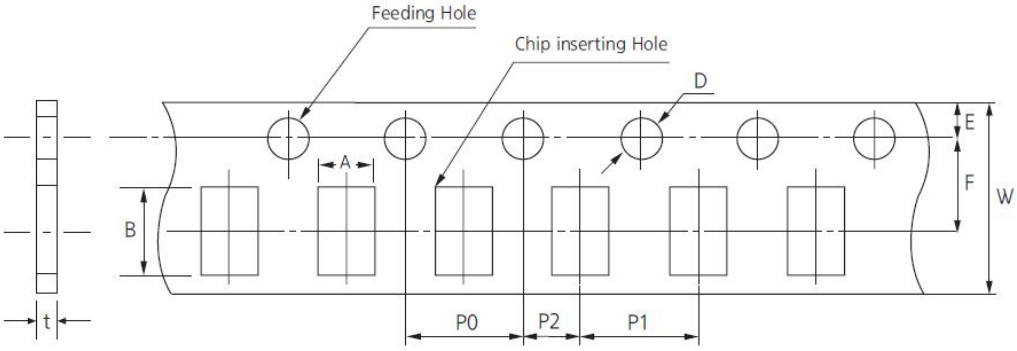

[unit:mm]

Size Inch(mm)	A	B	W	F	E	P1	P2	P0	D	t
0603 (1608)	1.00 ±0.10	1.90 ±0.10	8.00 ±0.30	3.50 ±0.05	1.75 ±0.10	4.00 ±0.10	2.00 ±0.05	4.00 ±0.10	φ1.50 +0.10/-0	1.1 Below
0805 (2012)	1.55 ±0.10	2.30 ±0.10								
1206 (3216)	2.05 ±0.10	3.60 ±0.10								

※ The table above are based on normal dimensions. The data may be changed with the special size tolerances.

1-3-2. Cardboard(Paper) tape : (P1 : 1mm/2mm pitch)

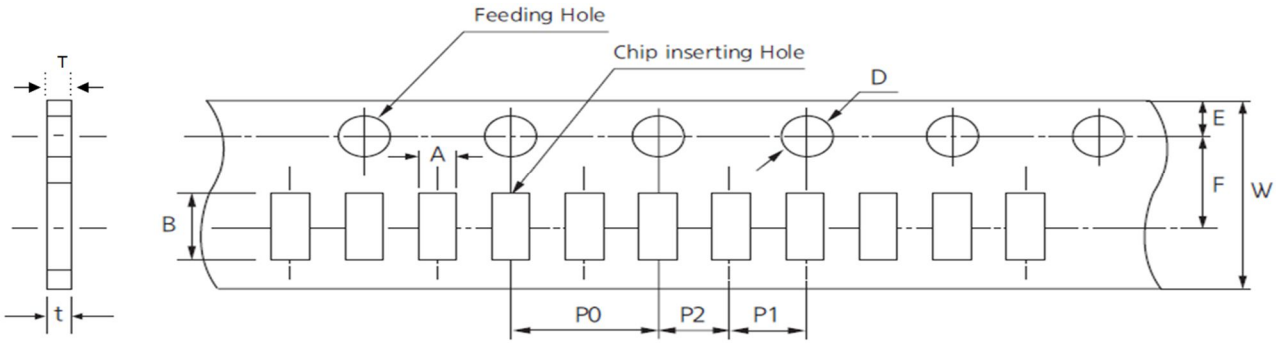

[unit:mm]

Size Inch(mm)	A	B	W	F	E	P1	P2	P0	D	t	T
01005 (0402)	0.25 ±0.02	0.46 ±0.02	8.00 ±0.30	3.50 ±0.05	1.75 ±0.10	2.00 ±0.05 (1.00 ±0.05)	2.00 ±0.05 (1.00 ±0.05)	4.00 ±0.10	ϕ1.50 +0.10 /-0.03	0.25 ±0.02	0.3 Below
0201 (0603)	0.38 ±0.03	0.68 ±0.03								0.35 ±0.03	0.5 Below
0402 (1005)	0.62 ±0.05	1.12 ±0.05								0.60 ±0.05	0.6 Below
0204 (0510)	0.62 +0.05 /-0.10	1.12 +0.05 /-0.10								0.37 ±0.03	0.6 Below

※ The table above are based on normal dimensions. The data may be changed with the special size tolerances.

1-3-3. Embossed(Plastic) tape (P1 : 4mm)

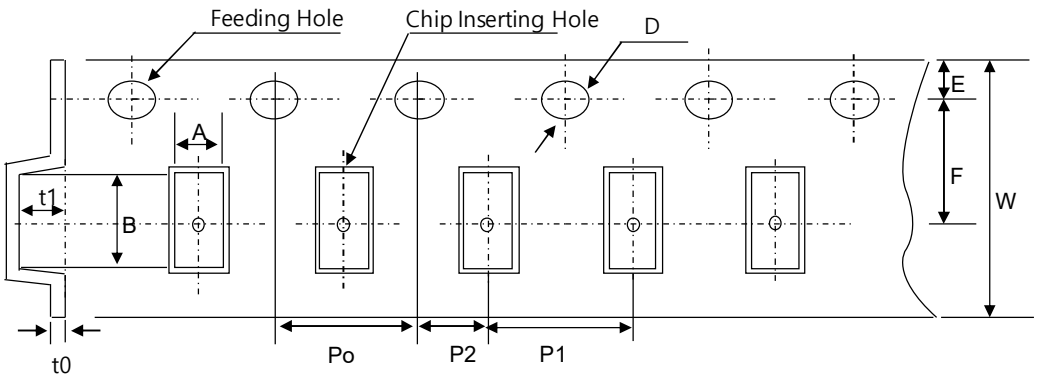

[unit:mm]

Size Inch(mm)	A	B	W	F	E	P1	P2	P0	D	t1	t0
008004 (0201)	0.14 ±0.02	0.27 ±0.02	4.00 ±0.05	1.80 ±0.02	0.90 ±0.05	1.00 ±0.02	1.00 ±0.02	2.00 ±0.03	0.80 ±0.04		
01005 (0402)	0.23 ±0.02	0.45 ±0.02	4.00 ±0.05	1.80 ±0.02	0.90 ±0.05	1.00 ±0.02	1.00 ±0.02	2.00 ±0.03	φ0.80 ±0.04	0.35 Below	0.20 ±0.05
0201 (0603)	0.45± 0.03	0.75± 0.03	8.00 ±0.30	3.50 ±0.05	1.75 ±0.10	2.00 ±0.05	2.00 ±0.05	4.00 ±0.10	φ1.5+0.1, -0.03	0.28 Max	0.42± 0.03
015008 (05025)	0.32 ±0.03	0.58 ±0.03							φ1.50 +0.10 /-	0.35 Below	0.50 Below
0603 (1608)	1.05 ±0.15	1.90 ±0.15				4.00 ±0.10			φ1.50 +0.10 /-0	2.92 Below	0.60 Below
0805 (2012)	1.45 ±0.20	2.30 ±0.20									
1206 (3216)	1.90 ±0.20	3.50 ±0.20									
1210 (3225)	2.80 ±0.20	3.60 ±0.20									
1808 (4520)	2.30 ±0.20	4.90 ±0.20	12.0 ±0.30	5.60 ±0.05		8.00 ±0.10				3.80 Below	
1812 (4532)	3.60 ±0.20	4.90 ±0.20									
2220 (5750)	5.50 ±0.20	6.20 ±0.20									

※ The table above are based on normal dimensions. The data may be changed with the special size tolerances.

1-3-4. Embossed(Plastic) tape (P1 : 2mm/1mm)

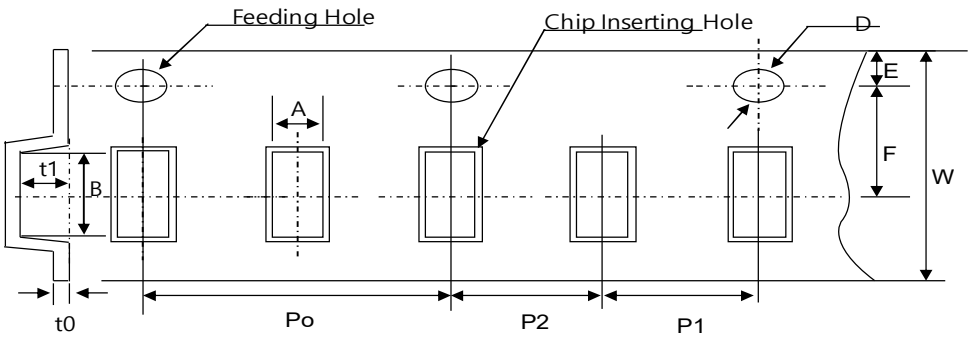

[unit:mm]

Size Inch(mm)	A	B	W	F	E	P1	P2	P0	D	t1	t0
008004 (0201)	0.14 ±0.02	0.27 ±0.02	4.00 ±0.05	1.80 ±0.02	0.90 ±0.05	1.00 ±0.02	1.00 ±0.02	2.00 ±0.03	0.80 ±0.04		
01005 (0402)	0.23 ±0.02	0.45 ±0.02	4.00 ±0.05	1.80 ±0.02	0.90 ±0.05	1.00 ±0.02	1.00 ±0.02	2.00 ±0.03	φ0.80 ±0.04		0.20 ±0.05
015008 (05025)	0.32 ±0.03	0.58 ±0.03	8.00 ±0.30	3.50 ±0.05	1.75 ±0.10	2.00 ±0.05	2.00 ±0.05	4.00 ±0.10	φ1.50 +0.10 /-	0.35 Max	0.5 Below

※ The table above are based on normal dimensions. The data may be changed with the special size tolerances.

1-3-5. Reel Size

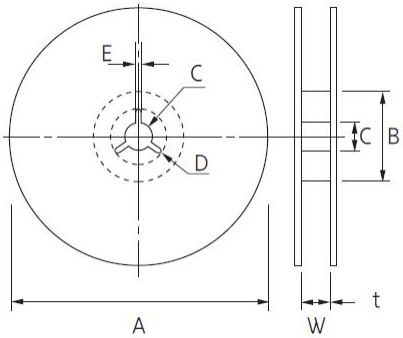

[unit:mm]

Symbol	Tape Width	A	B	C	D	E	W	t
7"Reel	4mm	φ178±2.0	MIN φ50	φ13±0.5	21±0.8	2.0±0.5	5±0.5	1.2±0.2
	8mm	φ178±2.0	MIN φ50	φ13±0.5	21±0.8	2.0±0.5	10±1.5	0.9±0.2
	12mm	φ178±2.0	MIN φ50	φ13±0.5	21±0.8	2.0±0.5	13±0.5	1.2±0.2
10"Reel	8mm	φ258±2.0	MIN φ70	φ13±0.5	21±0.8	2.0±0.5	10±1.5	1.8±0.2
13"Reel	8mm	φ330±2.0	MIN φ70	φ13±0.5	21±0.8	2.0±0.5	10±1.5	1.8±0.2
	12mm	φ330±2.0	MIN φ70	φ13±0.5	21±0.8	2.0±0.5	13±0.5	2.2±0.2

1-4. Cover tape peel-off force

1-4-1. Peel-off force

10 g.f ≤ peel-off force ≤ 70 g.f

1-4-2. Measurement Method

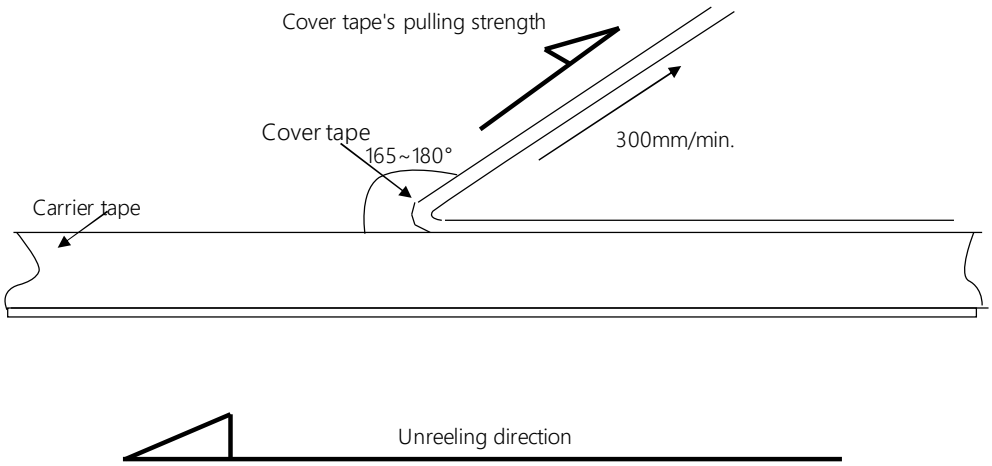

-Taping Packaging design : Packaging design follows IEC 60286-3 standard.

(IEC 60286-3 Packaging of components for automatic handling - parts 3)

* If the static electricity of SMT process causes any problems, please contact us.

1-5. BOX package

1-5-1. Packaging Label

REEL & Box Type

Label includes the information as below.

1) Chip size
2) Temperature Characteristics
3) Nominal Capacitance
4) Model Name
5) LOT Number & Reel Number
6) Q'ty

1-5-2. Box Packaging

1) Double packaging with the paper type of inner box and outer box.
2) Avoid any damages during transportation by car, airplane and ship.
3) Remark information of contents on inner box and outer box

※ If special packaging is required, please contact us.

1-5-3. 7" Box packaging

[Unit : mm]

- Inner Box (7" x 5 REEL)

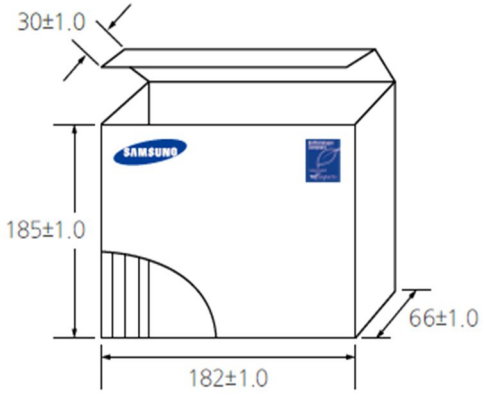

- Inner Box (7" x 10 REEL)

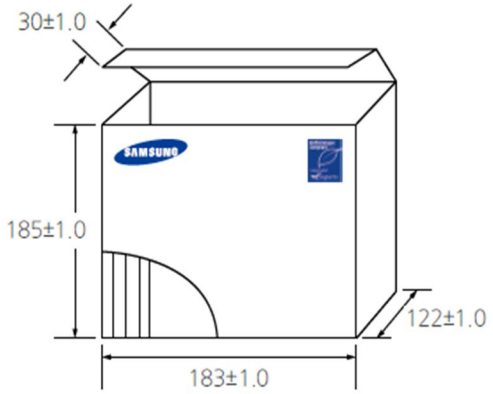

- Outer Box (7" x 20 REEL)

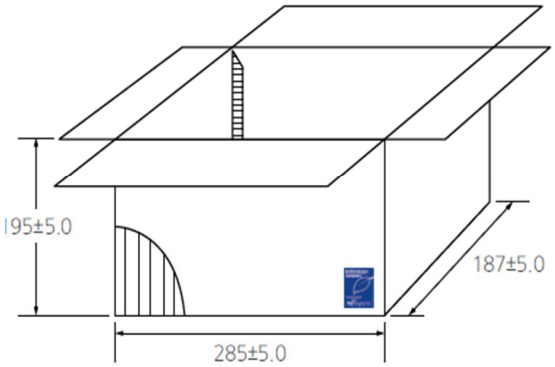

- Outer Box (7" x 60 REEL)

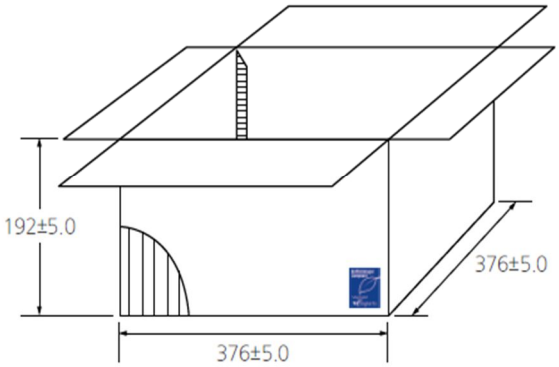

1-5-4. 13″ Box packaging

- Inner Box (13" x 4 REEL)

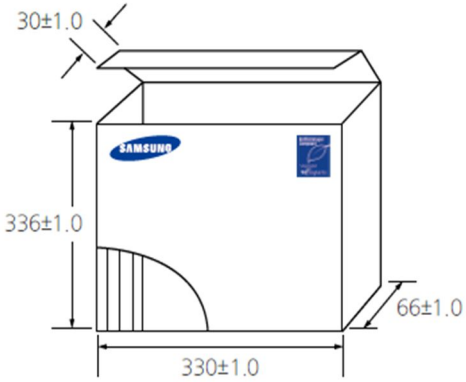

- Outer Box (13" x 20 REEL)

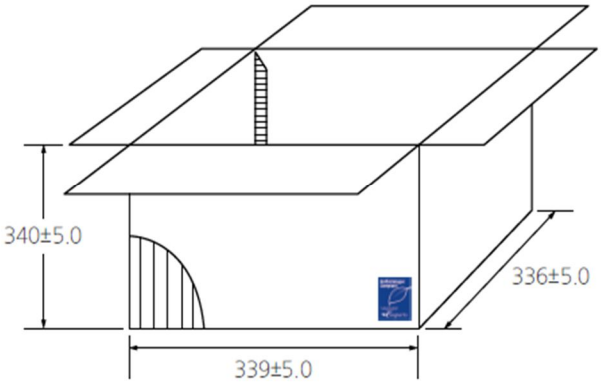

1-6. Chip Weight

Size (L/W) (inch/mm)	Size (T) (mm)	Temp	Weight (mg/pc)
01005/0402	0.2	C0G	0.08
	0.2	X7R	0.09
	0.2	X5R	0.1
0201/0603	0.3	C0G	0.25
	0.3	X7R	0.28
	0.3	X5R	0.32
0402/1005	0.5	C0G	1.2
	0.5	X7R	1.5
	0.5	X5R	1.6
0603/1608	0.8	C0G	4.6
	0.8	X7R	5.8
	0.8	X5R	6.9
0805/2012	0.65	C0G	7.2
	1.25	X7R	18.4
	1.25	X5R	20.9
1206/3216	1.25	C0G	33.9
	1.6	X7R	56.9
	1.6	X5R	58.9
1210/3225	2.5	C0G	77.3
	2.5	X7R	117.7
	2.5	X5R	132.2

The weight of product is typical value per size, for more details, please contact us.

2. Product Characteristic data

2-1. Capacitance

The capacitance is the ratio of the change in an electric charge according to voltage change. Due to the fact that the capacitance may be subject to change with the measured voltage and frequency, it is highly recommended to measure the capacitance based on the following conditions.

2-1-1. Measure capacitance with voltage and frequency specified in this document.
Regarding the voltage/frequency condition for capacitance measurement of each MLCC model, please make sure to follow a section "C. Reliability test Condition - Capacitance" in this document.

The following table shows the voltage and frequency condition according to the capacitance range.

[The voltage and frequency condition according to MLCC the capacitance range]

◆ **Class I**

Capacitance	Frequency	Voltage
≤ 1,000 pF	1 MHz ± 10%	0.5 ~ 5 Vrms
> 1,000 pF	1 kHz ± 10%	

◆ **Class II**

Capacitance	Frequency	Voltage
≤ 10 μF	1 kHz ± 10%	1.0 ± 0.2 Vrms
> 10 μF	120 Hz ± 20%	0.5 ± 0.1 Vrms
Exception*	1 kHz ± 10%	0.5 ± 0.1 Vrms

2-1-2. It is recommended to use measurement equipment with the ALC (Auto Level Control) option.
The reason is that when capacitance or measurement frequency is high, the output voltage of measurement equipment can be lower than the setting voltage due to the equipment limitation. Note that when capacitance or measurement frequency is excessively high, the measurement equipment may show ALC off warning and provide a lower output voltage than the setting voltage even with ALC option selected. It is necessary to ensure the output voltage of measurement equipment is the same as the setting voltage before measuring capacitance.

2-1-3. Capacitance value of high dielectric constant (Class II) MLCC changes with applied AC and DC voltage. Therefore, it is necessary to take into account MLCC's AC voltage characteristics and DC-bias voltage characteristics when applying MLCC to the actual circuit.

2-1-4. The capacitance is in compliance with the EIA RS-198-1-F-2002.

2-2. Tan δ (DF)

2-2-1. An ideal MLCC's energy loss is zero, but real MLCC has dielectric loss and resistance loss of electrode. DF (Dissipation Factor) is defined as the ratio of loss energy to stored energy and typically being calculated as percentage.

2-2-2. Quality factor (Q factor) is defined as the ratio of stored energy to loss energy.
The equation can be described as 1/DF. Normally the loss characteristic of Class I MLCC is presented in Q, since the DF value is so small whereas the loss characteristic of Class II MLCC is presented in DF.

2-2-3. It is recommended to use Class I MLCC for applications to require good linearity and low loss such as coupling circuit, filter circuit and time constant circuit.

2-3. Insulation Resistance

Ceramic dielectric has a low leakage current with DC voltage due to the high insulating properties. Insulation resistance is defined as the ratio of a leakage current to DC voltage.

2-3-1. When applying DC voltage to MLCC, a charging current and a leakage current flow together at the initial stage of measurement. While the charging current decreases, and insulation resistance (IR) in MLCC is saturated by time. Therefore, insulation resistance shall be measured 1 minute after applying the rated voltage.

2-4. Capacitance Aging

The aging characteristic is that the high dielectric (Class II) MLCC decreases capacitance value over time. It is also necessary to consider the aging characteristic with voltage and temperature characteristics when Class II MLCC is used in circuitry.

2-4-1. In general, aging causes capacitance to decrease linearly with the log of time as shown in the following graph. Please check with SEMCO for more details, since the value may vary between different models.

2-4-2. After heat treatment (150 °C, 1hour), the capacitance decreased by aging is recovered, so aging should be considered again from the time of heat treatment.

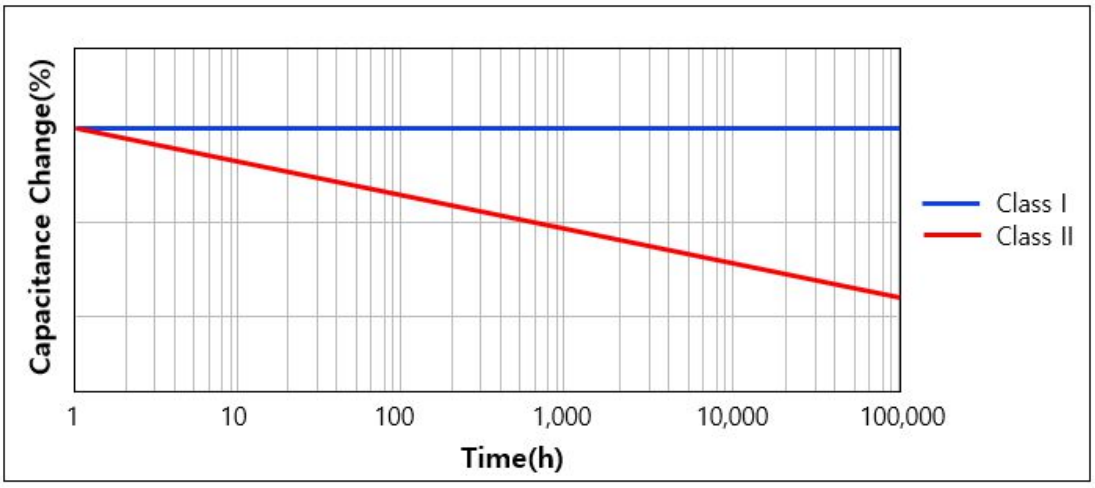

[Example of Capacitance Aging]

2-5. Temperature Characteristics of Capacitance (TCC)

Please consider temperature characteristics of capacitance since the electrical characteristics such as capacitance changes which is caused by a change in ceramic dielectric constant by temperature.

2-5-1. It is necessary to check the values specified in section "C. Reliability test Condition–Temperature Characteristics" for the temperature and capacitance change range of MLCC.

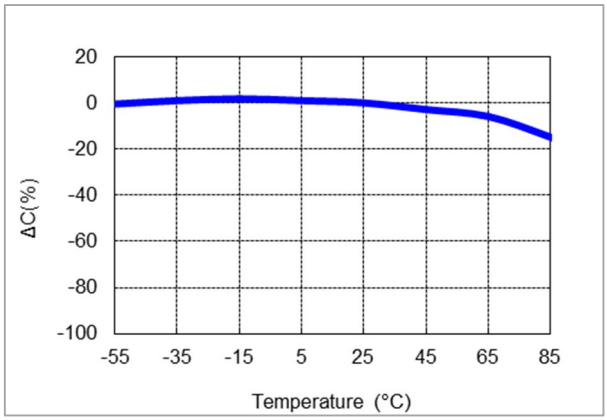

[Example of Temperature Characteristics (X5R)]

* Sample : 10uF, Rated voltage 6.3V

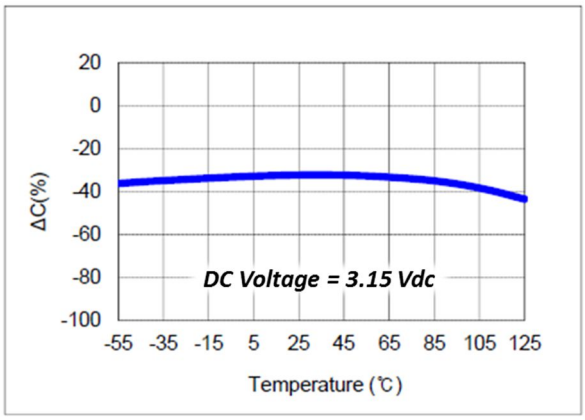

[Example of Bias TCC]

* Sample : 10uF, Rated voltage 6.3V

2-5-2. When selecting MLCC, it is necessary to consider the heat characteristics of a system, room temperature and TCC of MLCC, since the applied temperature may change the capacitance of MLCC.

2-5-3. In addition, Bias TCC of MLCC should be taken into account when DC voltage is applied to MLCC.

2-6. Self-heating Temperature

It is necessary to design the system, with considering self-heating generated by the ESR (Equivalent Series Resistance) of MLCC when AC voltage or pulse voltage is applied to MLCC.

2-6-1. When MLCC is used in an AC voltage or pulse voltage circuit, self-heating is generated when AC or pulse current flows through MLCC. Short-circuit may be occurred by the degradation of MLCC's insulating properties.

2-6-2. The reliability of MLCC may be affected by MLCC being used in an AC voltage or pulse voltage circuit, even the AC voltage or the pulse voltage is within the range of rated voltage.
Therefore, make sure to check the following conditions.

1) The surface temperature of MLCC must stay within the maximum operating temperature after AC or Pulse voltage is applied.

2) The rise in increase by self-heating of MLCC must not exceed 20℃

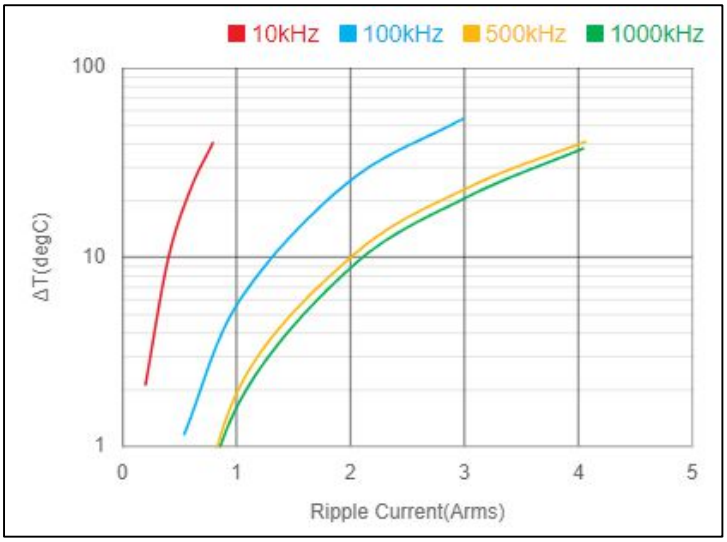

[Example of Ripple current]
* Sample : X7R 1uF, Rated voltage 50V

2-7. DC & AC Voltage Characteristics

It is required to consider voltage characteristics in the circuit since the capacitance value of high dielectric constant MLCC(Class II) is changed by applied DC & AC voltage.

2-7-1. Please ensure the capacitance change is within the allowed operating range of a system. In particular, when high dielectric constant type MLCC (Class II) is used in circuit with narrow allowed capacitance tolerance, a system should be designed with considering DC voltage, temperature characteristics and aging characteristics of MLCC.

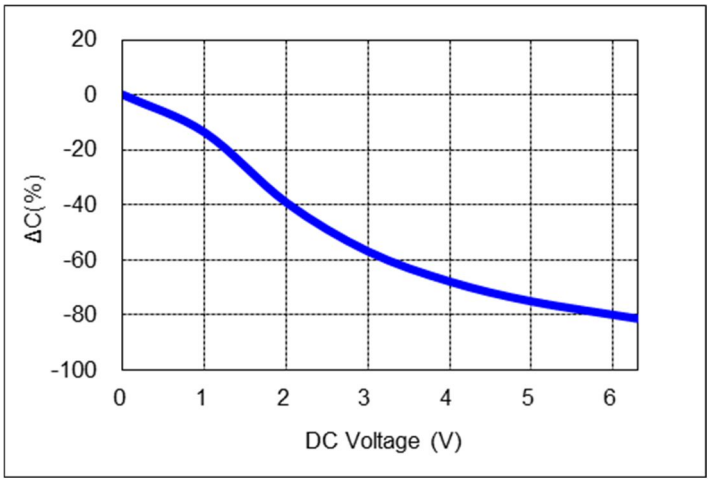

[Example of DC Bias characteristics]

* Sample : X5R 10uF, Rated voltage 6.3V

2-7-2. It is necessary to consider the AC voltage characteristics of MLCC and the AC voltage of a system, since the capacitance value of high dielectric constant type MLCC (Class II) varies with the applied AC voltage.

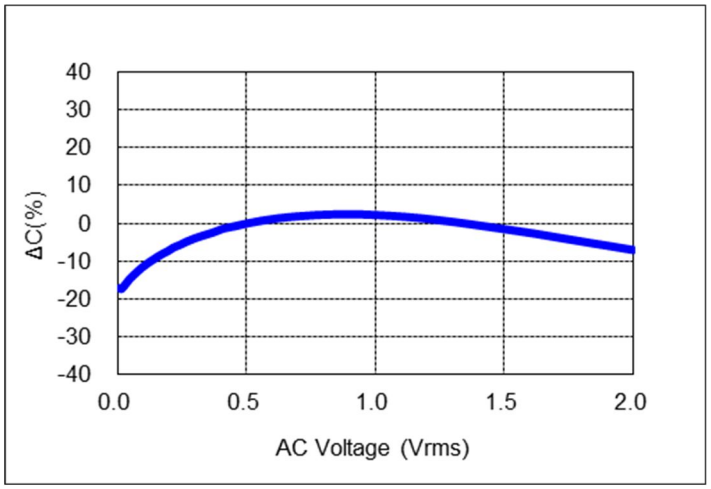

[Example of AC voltage characteristics]

* Sample : X5R 10uF, Rated voltage 6.3V

2-8. Impedance Characteristic

Electrical impedance (Z) of MLCC is the measurement of the opposition that MLCC presents to a current (I) when a voltage (V) is applied. It is defined as the ratio of the voltage to the current (Z=V/I). Impedance extends the concept of resistance to AC circuits and is a complex number consisting of the real part of resistance (R) and the imaginary part of reactance (X) as Z=R+jX. Therefore, it is required to design circuit with consideration of the impedance characteristics of MLCC based on the frequency (Z = R + jX)

2-8-1. MLCC operates as a capacitor in the low frequency and its reactance (XC) decreases as frequency increases (X_C=1/j2πfC) where f is frequency and C is capacitance.
The resistance (ESR; Equivalent Series Resistance) of MLCC in the low frequency mainly comes from the loss of its dielectric material.

2-8-2. MLCC operates as an inductor in the high frequency and the inductance of MLCC is called ESL (Equivalent Series Inductance). The reactance (XL) of MLCC in the high frequency increases as frequency increases (X_L=j2πf·ESL). The resistance (ESR) of MLCC in the high frequency mainly comes from the loss of its electrode metal.

2-8-3. SRF (Self Resonant Frequency) of MLCC is the frequency where its capacitive reactance (XC) and inductive reactance(XL) cancel each other and the impedance of MLCC has only ESR at SRF.

2-8-4. The impedance of MLCC can be measured by a network analyzer or an impedance analyzer. When using the network analyzer, please note that the small-signal input may lead to the impedance of low capacitance caused by the AC voltage characteristic of MLCC.

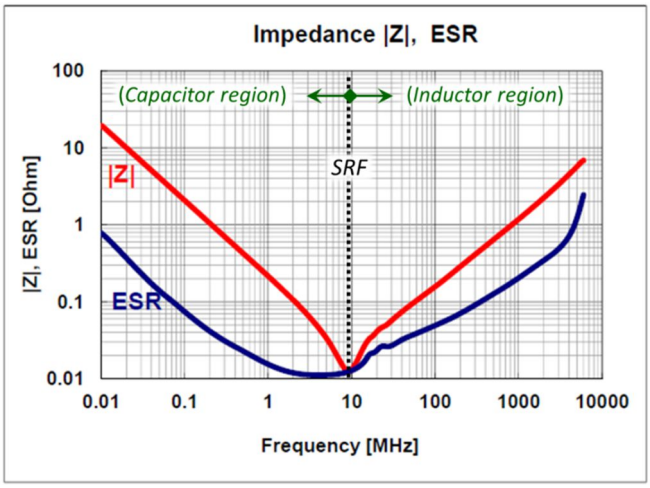

[Example of Impedance characteristics]

* Sample : X5R 1uF, Rated voltage 6.3V

3. Electrical & Mechanical Caution

3-1. Applied Voltage

The actual applied voltage on MLCC should not exceed the rated voltage set in the specifications.

3-1-1. Cautions by types of voltage applied to MLCC

· For DC voltage or DC+AC voltage, DC voltage or the maximum value of DC + AC voltage should not exceed the rated voltage of MLCC.

· For AC voltage or pulse voltage, the peak-to-peak value of AC voltage or pulse voltage should not exceed the rated voltage of MLCC.

· Abnormal voltage such as surge voltage, static electricity should not exceed the rated voltage of MLCC.

[Types of Voltage Applied to the Capacitor]

DC Voltage	AC Voltage	DC+AC Voltage 1	DC+AC Voltage 2	DC+Pulse Voltage
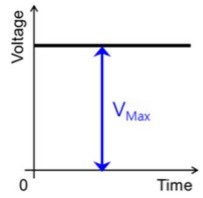	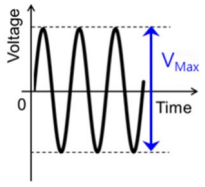	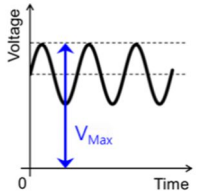	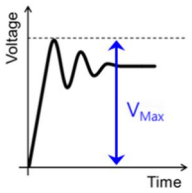	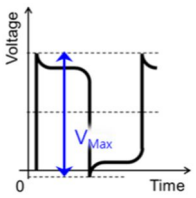

3-1-2. Effect of EOS (Electrical Overstress)

· Electrical Overstress such as a surge voltage or EOS can cause damages to MLCC, resulting in the electrical short failure caused by the dielectric breakdown in MLCC.

· Down time of MLCC is varied with the applied voltage and the room temperature and a dielectric shock caused by EOS can accelerate heating on the dielectric. Therefore, it can bring about a failure of MLCC in a market at the early stage.

· Please use caution not to apply excessive electrical overstress including spike voltage MLCC when preparing MLCC for testing or evaluating.

(1) Surge

When the overcurrent caused by surge is applied to MLCC, the influx of current into MLCC can induce the overshooting phenomenon of voltage as shown in the graph below and result in the electrical short failure in MLCC. Therefore, it is necessary to be careful to prevent the influx of surge current into MLCC.

(2) ESD (Electrostatic Discharge)

Since the voltage of the static electricity is very high but the quantity of electric charge is small compared to the surge, ESD can cause damage to MLCC with low capacitance as shown in the following graph, whereas surge with lots of electric charge quantity can cause damages to even high capacitance MLCC.

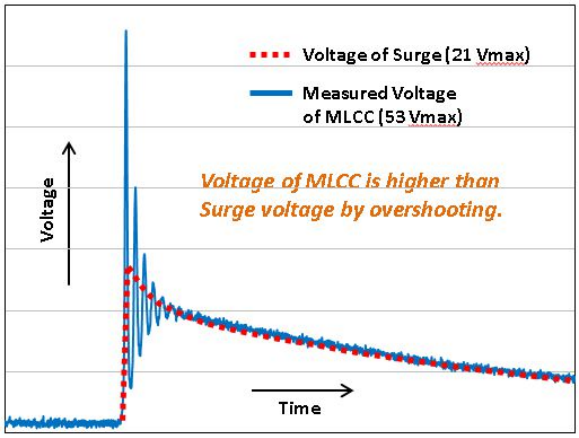

[Example of Surge applied to MLCC]

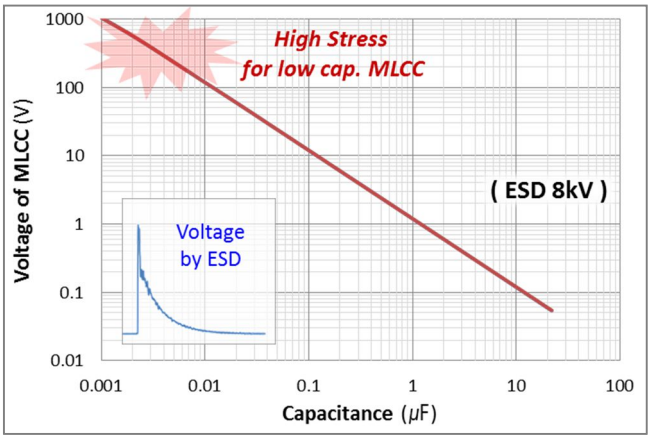

[Example of ESD applied to MLCC]

* Simulation for ESD 8kV

3-2. Vibration

Please check the types of vibration and shock, and the status of resonance.
Manage MLCC not to generate resonance and avoid any kind of impact to terminals.
When MLCC is used in a vibration environment, please make sure to contact us for the situation and consider special MLCC such as Soft-term, etc.

3-3. Shock

Mechanical stress caused by a drop may cause damages to a dielectric or a crack in MLCC
Do not use a dropped MLCC to avoid any quality and reliability deterioration.
When piling up or handling printed circuit boards, do not hit MLCC with the corners of a PCB to prevent cracks or any other damages to the MLCC.

3-4. Piezo-electric Phenomenon

MLCC may generate a noise due to vibration at specific frequency when using the high dielectric constant MLCC (Class Ⅱ) at AC or Pulse circuits.
MLCC may cause a noise if MLCC is affected by any mechanical vibrations or shocks.

4. Process of Mounting and Soldering

4-1. Mounting

4-1-1. Mounting position

It is recommended to locate the major axis of MLCC in parallel to the direction in which the stress is applied.

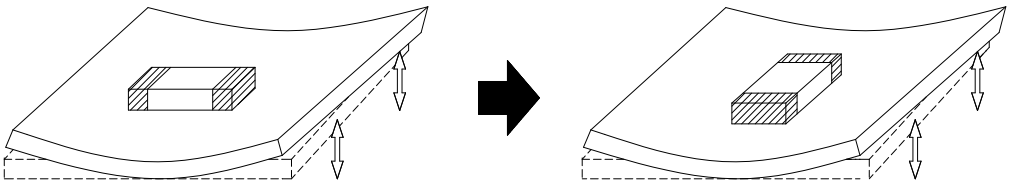

Not recommended Recommended

4-1-2. Cautions during mounting near the cutout

Please take the following measures to effectively reduce the stress generated from the cutting of PCB. Select the mounting location shown below, since the mechanical stress is affected by a location and a direction of MLCC mounted near the cutting line.

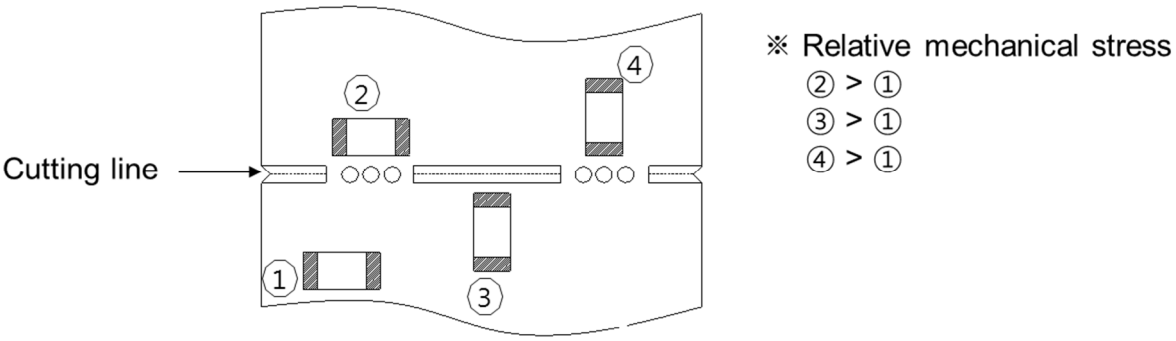

4-1-3. Cautions during mounting near screw

If MLCC is mounted near a screw hole, the board deflection may be occurred by screw torque. Mount MLCC as far from the screw holes as possible.

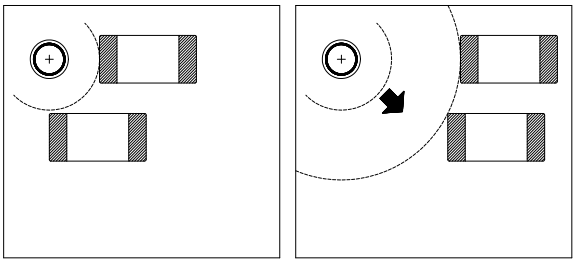

Not recommended Recommended

4-2. Caution before Mounting

4-2-1. It is recommended to store and use MLCC in a reel. Do not re-use MLCC that was isolated from the reel.

4-2-2. Check the capacitance characteristics under actual applied voltage.

4-2-3. Check the mechanical stress when actual process and equipment is in use.

4-2-4. Check the rated capacitance, rated voltage and other electrical characteristics before assembly. Heat treatment must be done prior to measurement of capacitance.

4-2-5. Check the solderability of MLCC that has passed shelf life before use.

4-2-6. The use of Sn-Zn based solder may deteriorate the reliability of MLCC.

4-3. Cautions during Mounting with Mounting (pick-and-place) Machines

4-3-1. Mounting Head Pressure

Excessive pressure may cause cracks in MLCC.

It is recommended to adjust the nozzle pressure within the maximum value of 300g.f.

Additional conditions must be set for both thin film and special purpose MLCC.

4-3-2. Bending Stress

When using a two-sided substrate, it is required to mount MLCC on one side first before mounting on the other side due to the bending of the substrate caused by the mounting head.

Support the substrate as shown in the picture below when MLCC is mounted on the other side.

If the substrate is not supported, bending of the substrate may cause cracks in MLCC.

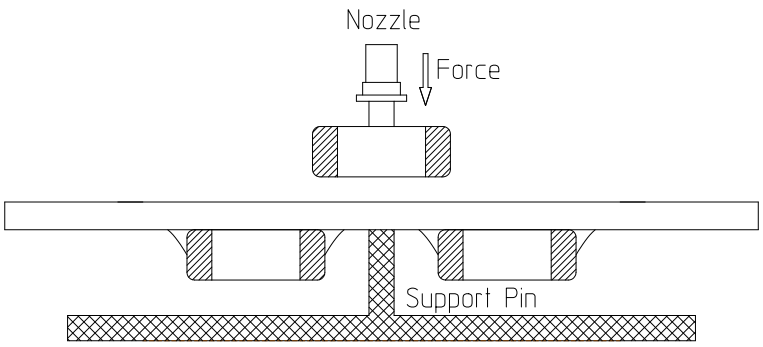

4-3-3. Suction nozzle

Dust accumulated in a suction nozzle and suction mechanism can impede a smooth movement of the nozzle. This may cause cracks in MLCC due to the excessive force during mounting.

If the mounting claw is worn out, it may cause cracks in MLCC due to the uneven force during positioning.

A regular inspection such as maintenance, monitor and replacement for the suction nozzle and mounting claw should be conducted.

4-4. Reflow soldering

MLCC is in a direct contact with the dissolved solder during soldering, which may be exposed to potential mechanical stress caused by the sudden temperature change.
Therefore, MLCC may be contaminated by the location movement and flux.
For the reason, the mounting process must be closely monitored.

Method		Classification
Reflow soldering	Overall heating	Infrared rays Hot plate VPS(Vapor phase)
	Local heating	Air heater Laser Light beam

4-4-1. Reflow Profile

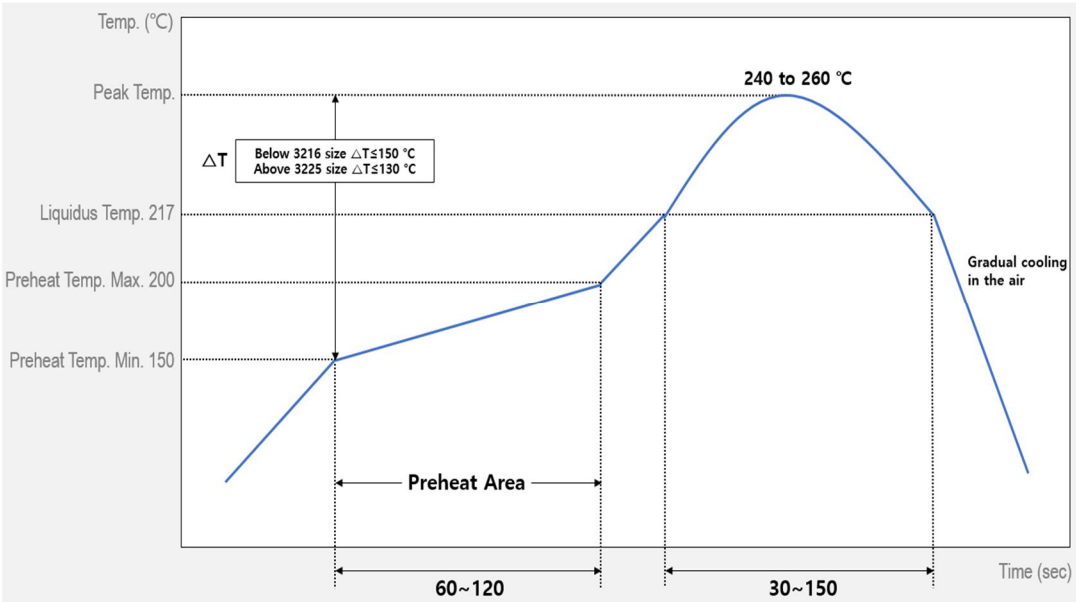

[Reflow Soldering Conditions]

Use caution not to exceed the peak temperature as shown.
Pre-heating is necessary for all constituents including the PCB to prevent the mechanical damages on MLCC. The temperature difference between the PCB and the component surface must be kept to the minimum.

As for reflow soldering, it is recommended to keep the number of reflow soldering to less than three times. Please check with us when the number of reflow soldering needs to exceed three times. Care must be exercised especially for the ultra-small size, thin film and high capacitance MLCC as they can be affected by thermal stress more easily.

4-4-2. Reflow temperature

The following quality problem may occur when MLCC is mounted with a lower temperature than the reflow temperature recommended by a solder manufacturer. The specified peak temperature must be maintained after taking into consideration the factors such as the placement of peripheral constituent and the reflow temperature.

- Drop in solder wettability
- Solder voids
- Potential occurrence of whisker
- Drop in adhesive strength
- Drop in self-alignment properties
- Potential occurrence of tombstones

4-4-3. Cooling

Natural cooling with air is recommended.

4-4-4. Optimum solder flux for reflow soldering

· Overly the thick application of solder pastes results in an excessive solder fillet height. This makes MLCC more vulnerable to the mechanical and thermal stress from the board, which may cause cracks in MLCC.

· Too little solder paste results in a lack of the adhesive strength, which may cause MLCC to isolate from PCB

· Check if solder has been applied uniformly after soldering is completed.

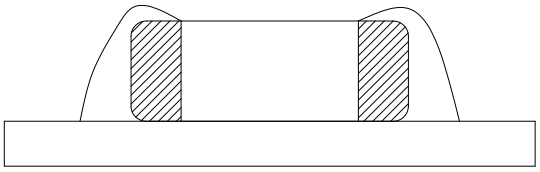

Too Much Solder
large stress may cause cracks

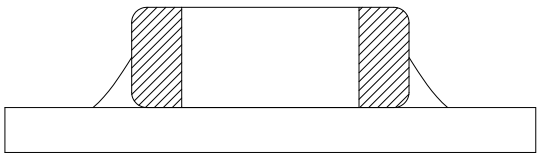

Not enough solder
Weak holding force may cause bad connections or detaching of the capacitor

· It is required to design a PCB with consideration of a solder land pattern and its size to apply an appropriate amount of solder to MLCC. The amount of the solder at the edge may impact directly on cracks in MLCC.

· The design of a suitable solder land is necessary since the more the solder amount is, the larger the force MLCC experiences and the higher the chance MLCC cracks.

4-5. Flow Soldering

4-5-1. Flow Profile

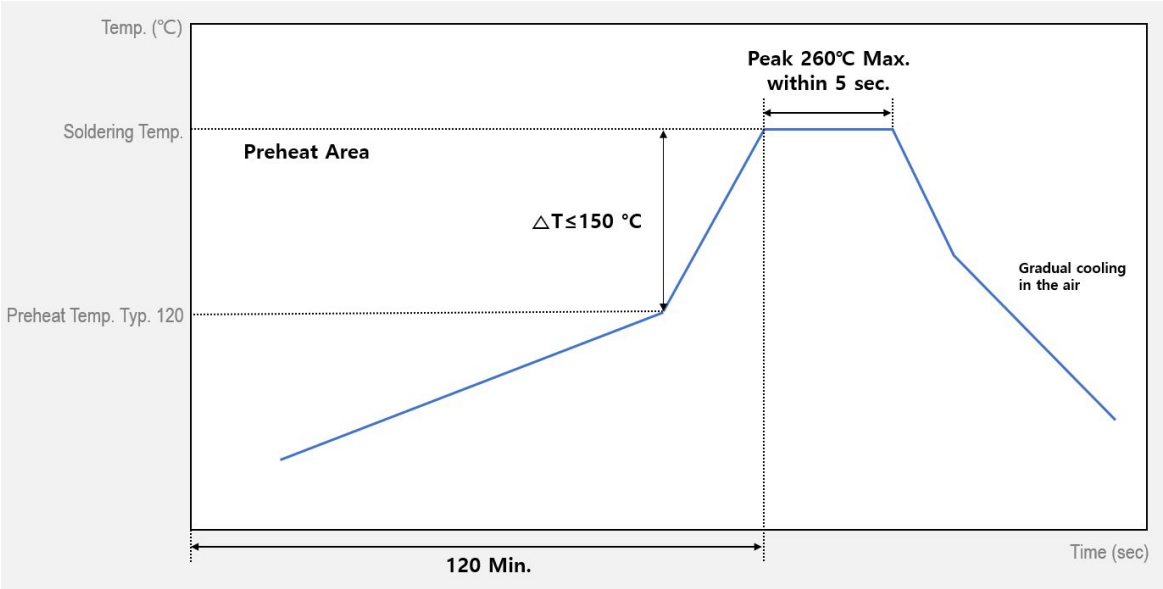

[Flow Soldering Conditions]

Take caution not to exceed peak temperature (260℃) and time (5sec) as shown.

Please contact us before use the type of high capacitance and thin film MLCC for some exceptions that may be caused.

4-5-2. Caution before Flow soldering

· When a sudden heat is applied to MLCC, the mechanical rigidity of MLCC is deteriorated by the internal deformation of MLCC. Preheating all the constituents including PCB is required to prevent the mechanical damages on MLCC. The temperature difference between the solder and the surface of MLCC must be kept to the minimum.

· If the flow time is too long or the flow temperature is too high, the adhesive strength with PCB may be deteriorated by the leaching phenomenon of the outer termination, or the capacitance value may be dropped by weak adhesion between the internal termination and the outer termination.

4-6. Soldering Iron

Manual soldering can pose a great risk on creating thermal cracks in MLCC. The high temperature soldering iron tip may come into a direct contact with the ceramic body of MLCC due to the carelessness of an operator. Therefore, the soldering iron must be handled carefully, and close attention must be paid to the selection of the soldering iron tip and to temperature control of the tip.

4-6-1. How to use a soldering Iron

· In order to minimize damages on MLCC, preheating MLCC and PCB is necessary.
A hot plate and a hot air type preheater should be used for preheating

. Do not cool down MLCC and PCB rapidly after soldering.

· Keep the contact time between the outer termination of MLCC and the soldering iron as short as possible. Long soldering time may cause problems such as adhesion deterioration by the leaching phenomenon of the outer termination.

Case size (inch)	Variation of Temp.	Soldering Temp.(℃)	Pre-heating Time(sec)	Soldering Time(sec)	Cooling Time(sec)
0201~1206	ΔT ≤ 190	350℃ max	≥60	≤3	-
1210~2220	ΔT ≤ 130	280℃ max	≥60	≤3	-

* The metal epoxy termination product is rated for a 300℃ max.
* Control Δ T in the solder iron and preheating temperature.

Condition of Iron facilities		
Wattage	**Tip diameter**	**Soldering time**
20W max	3 ㎜ max	3sec max

* Caution - Iron tip should not contact with ceramic body directly

Lead-free solder: Sn-3.0Ag-0.5CU

4-6-2. How to use a spot heater

· Compared to local heating using a solder iron, heat by a spot heater heats the overall MLCC and the PCB, which is likely to lessen the thermal shocks.
For a high density PCB, a spot heater can prevent the problem to connect between a solder iron and MLCC directly.

· If the distance from the air nozzle outlet to MLCC is too close, MLCC may be cracked due to the thermal stress. Follow the conditions set in the table below to prevent this problem.
The spot heater application angle as shown in the figure is recommended to create a suitable solder fillet shape.

· In case that heat of higher than 350℃ is applied to MLCC containing epoxy material, the epoxy material in MLCC may be damaged by heat.

Distance	≥ 5 ㎜
Hot Air Application angle	45℃
Hot Air Temperature Nozzle Outlet	≤ 400℃
Application Time	≤ 10s

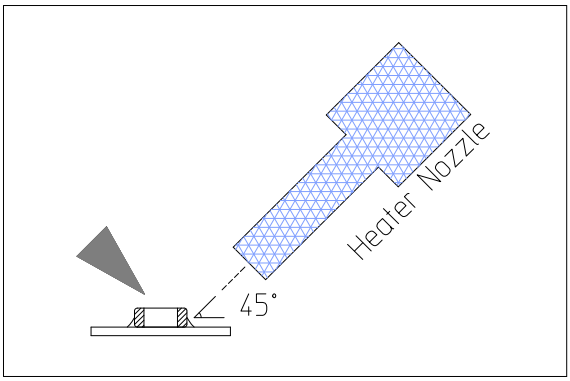

4-6-3. Cautions for re-work

· Too much solder amount will increase the risk of PCB bending or cause other damages.
· Too little solder amount will result in MLCC breaking loose from the PCB due to the inadequate adhesive strength.
· Check if the solder has been applied properly and ensure the solder fillet has a proper shape.

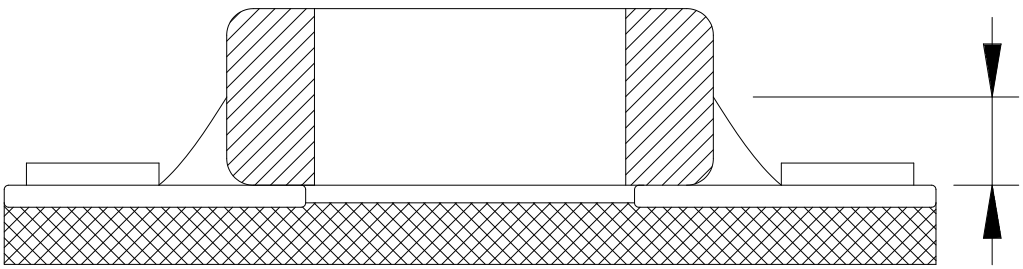

* Soldering wire below ø0.5mm is required for soldering.

4-7. Cleaning

4-7-1. In general, cleaning is unnecessary if rosin flux is used.
When acidic flux is used strongly, chlorine in the flux may dissolve into some types of cleaning fluids, thereby affecting the performance of MLCC.
This means that the cleansing solution must be carefully selected and should always be new.

4-7-2. Cautions for cleaning
MLCC or solder joint may be cracked with the vibration of PCB, if ultrasonic vibration is too strong during cleaning. When high pressure cleaning equipment is used, test should be done for the cleaning equipment and its process before the cleaning in order to avoid damages on MLCC.

4-8. Cautions for using electrical measuring probes

· Confirm the position of the support pin or jig when checking the electrical performance of MLCC after mounting on the PCB.
· Watch for PCB bending caused by the pressure of a test-probe or other equipment.
· If the PCB is bent by the force from the test probe, MLCC may be cracked or the solder joint may be damaged.
· Avoid PCB flexing by using the support pin on the back side of the PCB.
· Place equipment with the support pin as close to the test-probe as possible.
· Prevent shock vibrations of the board when the test-probe contacts a PCB.

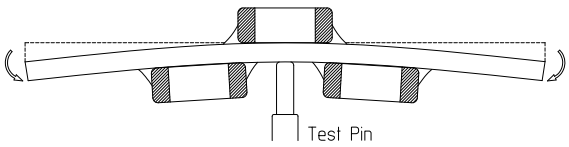

Not recommended

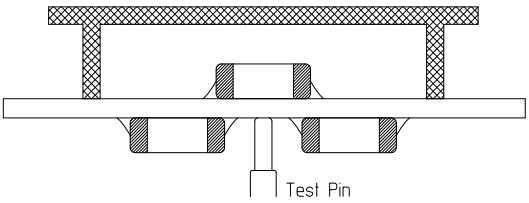

Recommended

4-9. Printed Circuit Board Cropping

· Do not apply any stress to MLCC such as bending or twisting the board after mounting MLCC on the PCB.
· The stress as shown may cause cracks in MLCC when cutting the board.
· Cracked MLCC may cause degradation to the insulation resistance, thereby causing short circuit.
· Avoid these types of stresses applied to MLCC.

[Bending] [Twisting]

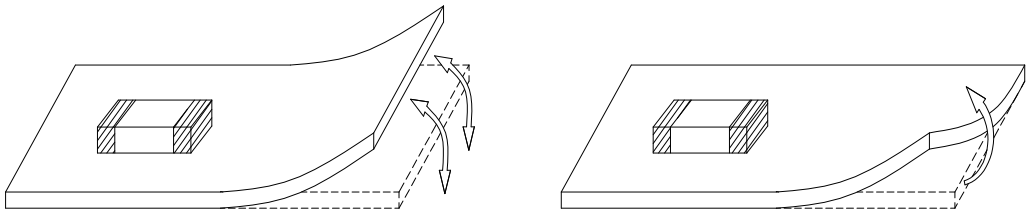

4-9-1. Cautions for cutting PCB

Check a cutting method of PCB in advance.

The high density board is separated into many individual boards after the completion of soldering. If the board is bent or deformed during separation, MLCC may be cracked.

Carefully select a separation method that minimizes the deformation of the PCB.

4-10. Assembly Handling

4-10-1. Cautions for PCB handling

Hold the edges of the board mounted with MLCC with both hands since holding with one hand may bend the board.

Do not use dropped boards, which may degrade the quality of MLCC.

4-10-2. Mounting other components

Pay attention to the following conditions when mounting other components on the back side of The board after MLCC has been mounted on the front side.

When the suction nozzle is placed too close to the board, board deflection stress may be applied to MLCC on the back side, resulting in cracks in MLCC.

Check if proper value is set on each chip mounter for a suction location, a mounting gap and a suction gap by the thickness of components.

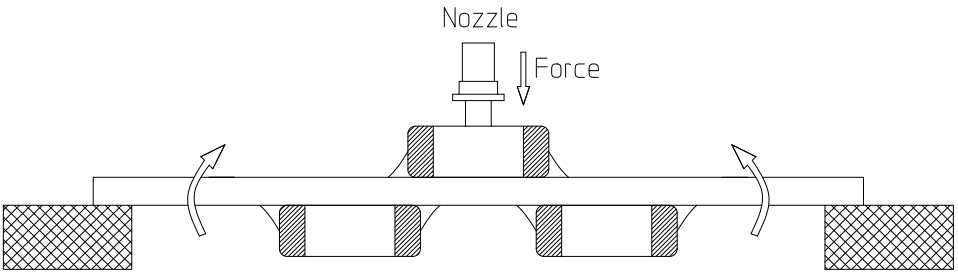

4-10-3. Board mounting components with leads

If the board is bent when inserting components (transformer, IC, etc.) into it, MLCC or solder joint may be cracked.

Pay attention to the following:

· Reduce the stress on the board during insertion by increasing the size of the lead insertion hole.
· Insert components with leads into the board after fixing the board with support pins or a dedicated jig.
· Support the bottom side of the board to avoid bending the board.
· Check the status of the height of each support pin regularly when the support pins are used.

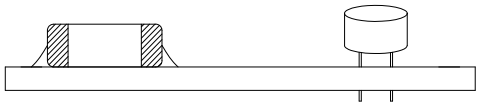

Not recommended

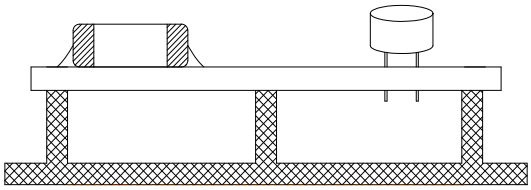

Recommended

4-10-4. Socket and / or connector attach / detach

Since the insertion or removal from sockets and connectors may cause the board to bent, make sure that MLCC mounted on the board should not be damaged in this process.

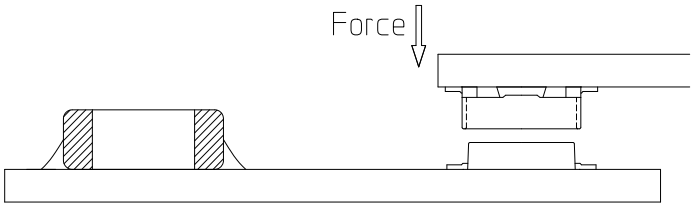

4-10-5. Fastening screw

When attaching a shield on a board, the board may be bent during a screw tightening work

Pay attention to the following conditions before performing the work.
· Plan the work to prevent the board from bending
· Use a torque driver to prevent over-tightening of the screw.
· Since the board may be bent by soldering, use caution in tightening the screw.

4-11. Adhesive selection

Pay attention to the following if an adhesive is used to position MLCC on the board before soldering.

4-11-1. Requirements for Adhesives

· They must have enough adhesive strength to prevent MLCC from slipping or moving during the handling the board.
· They must maintain their adhesive strength when exposed to soldering temperatures.

· They should not spread when applied to the PCB.
· They should have a long pot life.
· They should hardened quickly.
· They should not corrode the board or MLCC materials.
· They should be an insulator type that does not affect the characteristic of MLCC.
· They should be non-toxic, not harmful, and particularly safe when workers touch theadhesives.

4-11-2. Caution before Applying Adhesive

Check the correct application conditions before attaching MLCC to the board with an adhesive. If the dimension of land, the type of adhesives, the amount of coating, the contact surface areas, the curing temperature, or other conditions are not appropriate, it may degrade the MLCC performance.

4-11-3. Cautions for selecting Adhesive

Depending on the type of the chosen adhesive, MLCC insulation resistance may be degraded. In addition, MLCC may be cracked by the difference in contractile stress caused by the different contraction rate between MLCC and the adhesive.

4-11-4. Cautions for the amount of applied adhesive and curing temperature

· The inappropriate amount of the adhesive cause the weak adhesive strength, resulting in the a mounting defect in MLCC
· Excessive use of the adhesive may cause a soldering defect, loss of electrical connection, incorrect curing, or slippage of a mounting position, thereby an inflow of the adhesive onto a land section should be avoided.
· If the curing temperature is too high or the curing time is too long, the adhesive strength will be degraded. In addition, oxidation both on the outer termination (Sn) of MLCC and the surface of the board may deteriorate the solderability.

4-12. Flux

4-12-1. The excessive amount of flux generates excessive flux gases which may deteriorate solderability. Therefore, apply the flux thin and evenly as a whole.

4-12-2. Flux with a high ratio of halogen may oxidize the outer termination of MLCC, if cleaning is not done properly. Therefore, use flux with a halogen content of 0.1% max.

4-12-3. Strong acidic flux can degrade the MLCC performance

4-12-4. Check the solder quality of MLCC and the amount of remaining flux surrounding MLCC after the mounting process.

4-13. Coating

4-13-1. Crack caused by Coating

A crack may be caused in the MLCC due to amount of the resin and stress of thermal contraction of the resin during coating process.

During the coating process, the amount of resin and the stress of thermal contraction of the resin may cause cracks in MLCC

The difference of thermal expansion coefficient between the coating, or a molding resin may cause destruction, deterioration of insulation resistance or dielectric breakdown of MLCC such as cracks or detachment, etc.

4-13-2. Recommended Coating material

· A thermal expansion coefficient should be as close to that of MLCC as possible.

· A silicone resin can be used as an under-coating to buffer the stress.

· The resin should have a minimum curing contraction rate.

· The resin should have a minimum sensitivity (ex. Epoxy resin).

· The insulation resistance of MLCC can be deteriorated if a high hygroscopic property resin is used in a high humidity condition.

· Do not use strong acid substances due to the fact that coating materials inducing a family of halogen substances and organic acid may corrode MLCC.

5. Design

5-1. Circuit Design

When the board is dropped or bent, MLCC mounted on the board may be short-circuited by the drop in insulation resistance. Therefore, it is required to install safety equipment such as a fuse to prevent additional accidents when MLCC is short-circuited, otherwise, electric short and fire may occur. This product is not a safety guaranteed product.

5-2. PCB Design

5-2-1. Unlike Lead Type Components, SMD Type Components that are Designed to be Mounted Directly on the Board are Fragile to the Stress. In Addition, they are More Sensitive to Mechanical and Thermal Stress Than Lead Type Components.

5-2-2. MLCC Crack by PCB Material Type

A great difference of the thermal expansion coefficient between PCB and MLCC causes thermal expansion and contraction, resulting in cracks in MLCC. Even though MLCC is mounted on a board with a fluorine resin or on a single-layered glass epoxy, cracks in MLCC may occur.

5-3. Design System Evaluation

5-3-1. Evaluate the Actual Design with MLCC to Make Sure There is no Functional Issue or Violation of Specifications of the Finished Goods.

5-3-2. Please Note that the Capacitance May Differ Based on the Operating Condition of the Actual System Since Class 2 MLCC Capacitance Varies with Applied Voltage and Temperature.

5-3-3. Surge Resistance Must be Evaluated Since the Excessive Surge Caused by the Inductance of the Actual System may Apply to MLCC.

5-3-4. Note the Actual MLCC Size and the Termination Shape.

5-4 Land Dimension

The recommended land dimension is determined by evaluating the actual SET and a board.

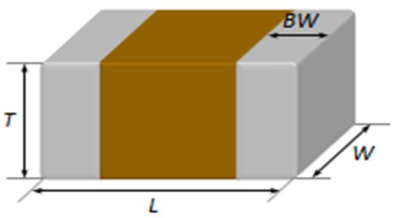

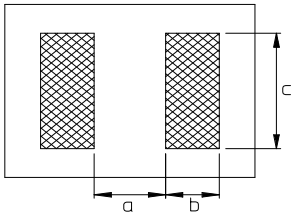

Reflow Footprint

Chip Size [mm]	Chip Tol. [mm]	a [mm]	b [mm]	c [mm]	(a+2b) min	(a+2b) max	Wmin	Wmax
0201	± 0.013	0.07~0.08	0.09~0.14	0.125~0.135	0.25	0.36	0.125	0.135
	± 0.03	0.07~0.09	0.10~0.15	0.135~0.145	0.27	0.39	0.135	0.145
0402	± 0.02	0.14~0.18	0.19~0.23	0.20~0.24	0.52	0.64	0.20	0.24
	± 0.05	0.15~0.19	0.20~0.24	0.23~0.27	0.55	0.67	0.23	0.27
05025	± 0.025	0.18~0.22	0.24~0.28	0.25~0.29	0.66	0.78	0.25	0.29
0603	± 0.03	0.22~0.28	0.31~0.37	0.30~0.36	0.84	1.02	0.30	0.36
	± 0.05	0.23~0.29	0.32~0.38	0.32~0.38	0.87	1.05	0.32	0.38
	± 0.07	0.24~0.30	0.32~0.38	0.35~0.40	0.88	1.06	0.35	0.40
	± 0.09	0.25~0.31	0.33~0.39	0.36~0.42	0.91	1.09	0.36	0.42
1005	± 0.05	0.36~0.44	0.49~0.57	0.51~0.59	1.34	1.58	0.51	0.59
	± 0.07	0.37~0.45	0.49~0.57	0.53~0.61	1.35	1.59	0.53	0.61
	± 0.10	0.38~0.46	0.50~0.58	0.56~0.64	1.38	1.62	0.56	0.64
	± 0.15	0.40~0.48	0.52~0.60	0.61~0.69	1.44	1.68	0.61	0.69
	± 0.20	0.42~0.50	0.53~0.61	0.66~0.74	1.48	1.72	0.66	0.74
	± 0.25	0.44~0.52	0.55~0.63	0.71~0.79	1.54	1.78	0.71	0.79
	± 0.30	0.45~0.53	0.56~0.64	0.76~0.84	1.57	1.81	0.76	0.84
	± 0.40	0.49~0.57	0.59~0.67	0.86~0.94	1.67	1.91	0.86	0.94
1608	± 0.10	0.63~0.73	0.71~0.81	0.80~0.90	2.05	2.35	0.80	0.90
	± 0.15	0.65~0.75	0.73~0.83	0.90~1.00	2.11	2.41	0.90	1.00
	± 0.20	0.67~0.77	0.74~0.84	0.95~1.05	2.15	2.45	0.95	1.05
	± 0.25	0.69~0.79	0.76~0.86	1.00~1.10	2.21	2.51	1.00	1.10
	± 0.30	0.71~0.81	0.77~0.87	1.05~1.15	2.25	2.55	1.05	1.15
2012	±0.10	0.79~0.89	0.88~0.98	1.25~1.35	2.55	2.85	1.25	1.35
	±0.15	0.81~0.91	0.90~1.00	1.30~1.40	2.61	2.91	1.30	1.40
	±0.20	0.83~0.93	0.91~1.01	1.35~1.45	2.65	2.95	1.35	1.45
	±0.25	0.85~0.95	0.93~1.03	1.40~1.50	2.71	3.01	1.40	1.50
	±0.30	0.89~0.97	0.94~1.04	1.45~1.55	2.75	3.05	1.45	1.55
3216	±0.20	1.64~1.76	1.19~1.31	1.74~1.86	4.02	4.38	1.74	1.86
	±0.30	1.69~1.81	1.22~1.34	1.84~1.96	4.13	4.49	1.84	1.96
3225	±0.20	1.64~1.76	1.29~1.41	2.64~2.76	4.22	4.58	2.64	2.76
	±0.30	1.69~1.81	1.32~1.44	2.74~2.86	4.33	4.69	2.74	2.86
4532	±0.40	2.17~2.33	1.75~1.91	3.42~3.58	5.67	6.15	3.42	3.58
5750	±0.40	2.75~2.95	2.03~2.23	5.30~5.50	6.81	7.41	5.30	5.50

Flow Footprint

Chip Size [mm]	Chip Tol. [mm]	a [mm]	b [mm]	c [mm]	(a+2b) min	(a+2b) max	Wmin	Wmax
1005	± 0.05	0.55~0.65	0.70~0.80	0.55~0.65	1.95	2.25	0.55	0.65
	± 0.07	0.55~0.65	0.70~0.80	0.55~0.65	1.95	2.25	0.55	0.65
	± 0.10	0.55~0.65	0.70~0.80	0.60~0.70	1.95	2.25	0.60	0.70
	± 0.15	0.55~0.65	0.70~0.80	0.60~0.70	1.95	2.25	0.60	0.70
	± 0.20	0.60~0.70	0.70~0.80	0.65~0.75	2.00	2.30	0.65	0.75
	± 0.25	0.60~0.70	0.70~0.80	0.65~0.75	2.00	2.30	0.65	0.75
1608	± 0.10	0.90~1.00	0.80~0.90	0.90~1.00	2.50	2.80	0.90	1.00
	± 0.15	0.90~1.00	0.85~0.95	0.90~1.00	2.60	2.90	0.90	1.00
	± 0.20	0.90~1.00	0.85~0.95	0.95~1.05	2.60	2.90	0.95	1.05
	± 0.25	0.95~1.05	0.85~0.95	0.95~1.05	2.65	2.95	0.95	1.05
	± 0.30	0.95~1.05	0.85~0.95	1.00~1.10	2.65	2.95	1.00	1.10
2012	± 0.10	1.00~1.10	1.05~1.15	1.30~1.40	3.10	3.40	1.30	1.40
	± 0.15	1.05~1.15	1.05~1.15	1.30~1.40	3.15	3.45	1.30	1.40
	± 0.20	1.05~1.15	1.05~1.15	1.35~1.45	3.15	3.45	1.35	1.45
	± 0.25	1.05~1.15	1.10~1.20	1.35~1.45	3.25	3.55	1.35	1.45
	± 0.30	1.05~1.15	1.10~1.20	1.40~1.50	3.25	3.55	1.40	1.50
	± 0.35	1.05~1.15	1.10~1.20	1.40~1.50	3.25	3.55	1.40	1.50
3216	± 0.15	2.00~2.10	1.40~1.50	1.70~1.80	4.80	5.10	1.70	1.80
	± 0.20	2.00~2.10	1.40~1.50	1.75~1.85	4.80	5.10	1.75	1.85
	± 0.30	2.05~2.15	1.40~1.50	1.80~1.90	4.85	5.15	1.80	1.90
3225	± 0.30	1.90~2.00	1.55~1.65	2.70~2.80	5.00	5.30	2.70	2.80
	± 0.40	1.95~2.05	1.55~1.65	2.75~2.85	5.05	5.35	2.75	2.85

6. Others

6-1. Storage environment

6-1-1. Recommendation for temperature/humidity

Even taping and packaging materials are designed to endure a long-term storage, they should be stored with a temperature of 0~40°C and an RH of 0~70% otherwise, too high temperatures or humidity may deteriorate the quality of the product rapidly.

As oxidization is accelerated when relative humidity is above 70%RH, the lower the humidity is, the better the solderability is.

As the temperature difference may cause dew condensation during the storage of the product, it is a must to maintain a temperature control environment.

6-1-2. Shelf Life

An allowable storage period should be within 6 months from the outgoing date of delivery in consideration of solderability. As for products in storage over 6 months, please check solderability before use.

6-1-3. Moisture Sensitivity Level

MSL : Equal to LEVEL 1

Note : Baking is not required.

6-2. Caution for corrosive environment

As corrosive gases may deteriorate the solderability of MLCC outer termination, it is a must to store MLCC in an environment without gases. MLCC that is exposed to corrosive gases may cause its quality issues due to the corrosion of plating layers and the penetration of moisture.

6-3. Equipment in operation

6-3-1. Do not touch MLCC directly with bare hands to prevent an electric shock or damage.

6-3-2. The termination of MLCC shall not be contacted with a conductive object (short –circuit).

Do not expose MLCC to conductive liquid containing acidic or alkaline material.

6-3-3. Do not use the equipment in the following conditions.

(1) Exposure to water or oil

(2) Exposure to direct sunlight

(3) Exposure to Ozone or ultra-violet radiation.

(4) Exposure to corrosive gas (e.g. hydrogen sulfide, sulfur dioxide, chlorine, ammonia gas)

(5) Exposure to vibration or mechanical shock exceeding specified limit

(6) Exposure to high humidity

6-3-4. If the equipment starts generating any smoke, fire or smell, immediately switch it off or unplug from the power source. If the equipment is not switched off or unplugged, serious damage may occur due to the continuous power supply.
Please be careful with the high temperature in this condition.

6-4. Waste treatment

In case of scrapping MLCC, it is incinerated or buried by a licensed industrial waste company. When scrapping MLCC, it is recommended to incinerate or bury the scrappage by a licensed industrial waste company.

6-5. Operating temperature

The operating temperature limit is determined by the specification of each models.

6-5-1. Do not use MLCC over the maximum operating temperature.
Pay attention to equipment's temperature distribution and the seasonal fluctuation of ambient temperature.

6-5-2. The surface temperature of MLCC cannot exceed the maximum operating temperature including self-heating effects.

6-6. Transportation

The performance of MLCC may be affected by transportation conditions.

6-6-1. MLCC shall be protected from excessive temperature, humidity and a mechanical force during transportation.
During transportation, the cartons shall not be deformed and the inner packaging shall be protected from excessive external forces.

6-6-2. Do not apply excessive vibrations, shocks or excessive forces to MLCC.
· If excessive mechanical shock or stress are applied, MLCC's ceramic body may crack.
· When the surface of MLCC is hit with the sharp edge of an air driver, a soldering iron, or a tweezer, etc, MLCC may crack or become short-circuited.

6-6-3. MLCC may crack and become non-functional due to the excessive shocks or dropping during transportation.

6-7. Notice

Some special products are excluded from this document.
Please be advised that this is a standard product specification for a reference only.
We may change, modify or discontinue the product specifications without notice at any time.
So, you need to approve the product specifications before placing an order.
Should you have any question regarding the product specifications,
please contact our sales personnel or application engineers.

Caution of Application

Disclaimer

All product specifications, statements, information and data (collectively, the "Information") in this spec sheet or made available on the website are subject to change.
The customer is responsible for checking and verifying the extent to which the Information contained in this publication is applicable to an order at the time the order is placed.
All Information given herein is believed to be accurate and reliable, but it is presented without guarantee, warranty, or responsibility of any kind, expressed or implied.
ANY USE OF PRODUCT OUTSIDE OF SPECIFICATIONS OR ANY STORAGE OR INSTALLATION INCONSISTENT WITH PRODUCT GUIDANCE VOIDS ANY WARRANTY.
Accordingly, customer applications which require a high degree of reliability or safety should employ suitable designs or other safeguards (such as installation of protective circuitry or redundancies) in order to ensure that the failure of an electrical component does not result in a risk of personal injury or property damage.
Although all product–related warnings, cautions and notes must be observed, the customer should not assume that all safety measures are indicted or that other measures may not be required.

Limitation

Please contact us with usage environment information such as voltage, current, temperature, or other special conditions before using our products for the applications listed below. The below application conditions require especially high reliability products to prevent defects that may directly cause damages or loss to third party's life, body or property.
If you have any questions regarding this 'Limitation' , you should first contact our sales personnel or application engineers.

① Aerospace/Aviation equipment
② 1wheeler, 2wheeler and 3wheeler vehicle
③ Automotive of Transportation equipment
④ Military equipment
⑤ Atomic energy-related equipment
⑥ Undersea equipment
⑦ Medical equipment
⑧ Disaster prevention/crime prevention equipment
⑨ Power plant control equipment
⑩ Traffic signal equipment
⑪ Data-processing equipment
⑫ Electric heating apparatus, burning equipment
⑬ Safety equipment
⑭ Any other applications with the same as or similar complexity or reliability to the applications